The original of this drawing document was prepared by Soltesz, Inc. (SOLTESZ). If this document was not obtained directly from SOLTESZ and/or it was transmitted electronically, SOLTESZ cannot guarantee that unauthorized changes and / or alterations were not made by others. If verification of the information contained hereon is needed, contact should be made directly with SOLTESZ. SOLTESZ makes no warranties, express or implied, concerning the accuracy of any information that has been transmitted by electronic means.

REFERENCE GRID A B C D E F G H I J K L M N O — 1 2 3 4 5 6 7 8 9 10

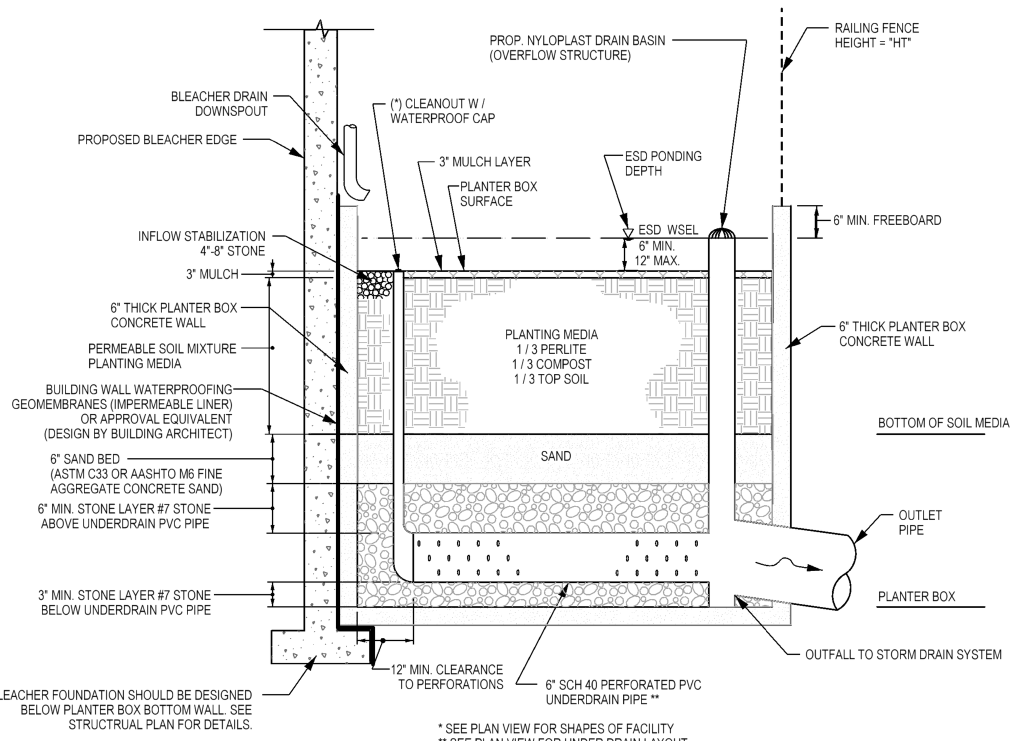

* SEE PLAN VIEW FOR SHAPES OF FACILITY
** SEE PLAN VIEW FOR UNDER DRAIN LAYOUT

TYPICAL SECTION THROUGH
MICRO-BIORETENTION PLANTER BOX FACILITY

N.T.S.

1

SITE SPECIFIC DATA			
PROJECT NAME			
PROJECT LOCATION			
STRUCTURE ID			
TREATMENT REQUIRED			
VOLUME BASED (CF)		FLOW BASED (CFS)	
TREATMENT HGL AVAILABLE (FT)			
PEAK BYPASS REQUIRED (CFS) – IF APPLICABLE			
PIPE DATA	I.E.	MATERIAL	DIAMETER
INLET PIPE 1			
INLET PIPE 2			
OUTLET PIPE			
	PRETREATMENT	BIOFILTRATION	DISCHARGE
RIM ELEVATION			
SURFACE LOAD	PARKWAY	OPEN PLANTER	PARKWAY
FRAME & COVER	ø30"	N/A	ø24"
WETLANDMEDIA VOLUME (CY)			7.26
WETLANDMEDIA DELIVERY METHOD			TBD
ORIFICE SIZE (DIA. INCHES)			ø3.07"
MAXIMUM PICK WEIGHT (LBS)			TBD
NOTES:			

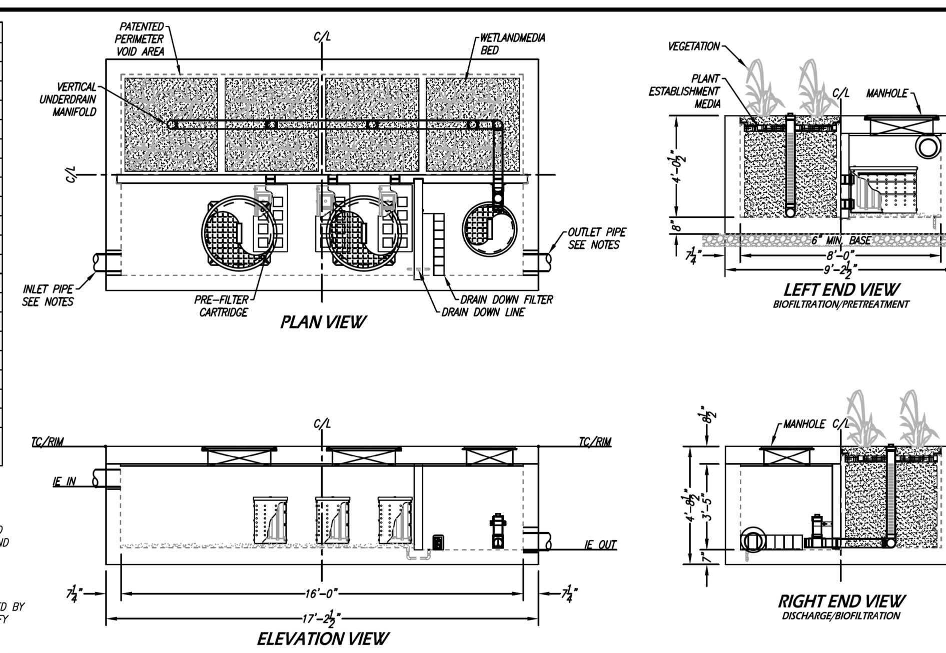

INSTALLATION NOTES

1. CONTRACTOR TO PROVIDE ALL LABOR, EQUIPMENT, MATERIALS AND INCIDENTALS REQUIRED TO OFFLOAD AND INSTALL THE SYSTEM AND APPURTENANCES IN ACCORDANCE WITH THIS DRAWING AND THE MANUFACTURERS SPECIFICATIONS, UNLESS OTHERWISE STATED IN MANUFACTURERS CONTRACT.
2. UNIT MUST BE INSTALLED ON LEVEL BASE. MANUFACTURER RECOMMENDS A MINIMUM 6" LEVEL ROCK BASE UNLESS SPECIFIED BY THE PROJECT ENGINEER. CONTRACTOR IS RESPONSIBLE TO VERIFY PROJECT ENGINEERS RECOMMENDED BASE SPECIFICATIONS.
3. ALL PIPES MUST BE FLUSH WITH INSIDE SURFACE OF CONCRETE. (PIPES CANNOT INTRUDE BEYOND FLUSH). INVERT OF OUTFLOW PIPE MUST BE FLUSH WITH DISCHARGE CHAMBER FLOOR. ALL GAPS AROUND PIPES SHALL BE SEALED WATER TIGHT WITH A NON-SHRINK GROUT PER MANUFACTURERS STANDARD CONNECTION DETAIL AND SHALL MEET OR EXCEED REGIONAL PIPE CONNECTION STANDARDS.
4. CONTRACTOR TO SUPPLY AND INSTALL ALL EXTERNAL CONNECTING PIPES.
5. CONTRACTOR RESPONSIBLE FOR INSTALLATION OF ALL RISERS, MANHOLES, AND HATCHES. CONTRACTOR TO GROUT ALL MANHOLES AND HATCHES TO MATCH FINISHED SURFACE UNLESS SPECIFIED OTHERWISE.
6. DRIP OR SPRAY IRRIGATION REQUIRED ON ALL UNITS WITH VEGETATION.

GENERAL NOTES

1. MANUFACTURER TO PROVIDE ALL MATERIALS UNLESS OTHERWISE NOTED.
2. ALL DIMENSIONS, ELEVATIONS, SPECIFICATIONS AND CAPACITIES ARE SUBJECT TO CHANGE. FOR PROJECT SPECIFIC DRAWINGS DETAILING EXACT DIMENSIONS, WEIGHTS AND ACCESSORIES PLEASE CONTACT MANUFACTURER.

MIN. ELEVATION DIFFERENCE BETWEEN
INVERT IN AND INV. OUT = 6"

TREATMENT FLOW (CFS)	0.462
OPERATING HEAD (FT)	3.4
PRETREATMENT LOADING RATE (GPM/SF)	TBD
WETLAND MEDIA LOADING RATE (GPM/SF)	1.0

THE PRODUCT DESCRIBED MAY BE PROTECTED BY ONE OR MORE OF THE FOLLOWING US PATENTS: 7,425,262; 7,470,362; 7,674,378; 8,303,816; RELATED FOREIGN PATENTS OR OTHER PATENTS PENDING

PROPRIETARY AND CONFIDENTIAL: THE INFORMATION CONTAINED IN THIS DRAWING IS THE SOLE PROPERTY OF MODULAR WETLANDS SYSTEMS. ANY REPRODUCTION IN PART OR AS A WHOLE WITHOUT THE WRITTEN PERMISSION OF MODULAR WETLANDS SYSTEMS IS PROHIBITED.

MODULAR WETLANDS

MWS-L-8-16-V
STORMWATER BIOFILTRATION SYSTEM
STANDARD DETAIL

MODULAR WETLAND SYSTEM (MWS)

PERMEABLE PAVEMENT:

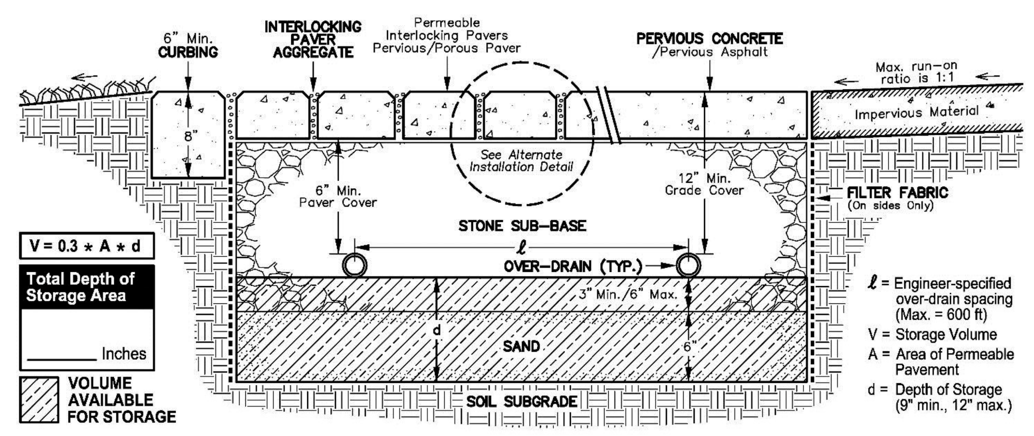

V = 0.3 * A * d

Total Depth of Storage Area

_______ Inches

VOLUME AVAILABLE FOR STORAGE

ℓ = Engineer-specified over-drain spacing (Max. = 600 ft)
V = Storage Volume
A = Area of Permeable Pavement
d = Depth of Storage (9" min., 12" max.)

GENERAL REQUIREMENTS:

Within three (3) days of installation, contractor must perform single ring infiltration tests. Poured-in-place concrete must remain free from all light vehicular traffic for a minimum of seven (7) days. Heavy vehicular traffic must be restricted for at least ten (10) days after placement.

Post construction of infiltration rates required for all surfaces must conform to ASTM C1701 for poured-in-place permeable concrete, or ASTM C1781 for permeable pavers.

SETBACKS:

Pervious Pavements require MC DOT prior written approval before being designed within public rights of way.

The storage volume for any pervious surface shall be located down gradient of building structures and be setback a minimum of:

- 100 feet from primary potable water supply or open loop geothermal wells (10' for SF Residential)
- 50 feet from alternate potable water supply or closed loop geothermal wells (No Setback for S.F. Residential)
- 25 feet from septic systems (10' for S.F. Residential)
- 10 feet from any other Infiltrating ESD Practice
- 10 feet from buildings
- Raised mulch/planting beds shall not be placed adjacent to Permeable Pavement

ALTERNATE INSTALLATION DETAIL:

Optional engineer-approved installation as per manufacturers recommendations. *

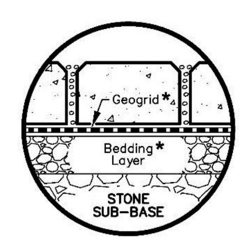

LEGEND:

CURBING	6" minimum width. Curbing is not required for sidewalk applications.
INTERLOCKING PAVER AGGREGATE	Paver gap aggregate shall be a silica-based stone per manufacturer's recommendations or meeting ASTM D448 size criteria of No. 8, 89, or 9 stone.
FILTER FABRIC	Engineer-approved, permeable, non-woven geotextile fabric. On sides only.
OVER-DRAIN	4" Schedule 40 PVC or HDPE N-12 installed perpendicular to grade. One foot of over-drain is required for every 600 sq. ft. Over-drain may not connect to drywells or any other SWM. Over-drain discharge point must be shown on the plan view.
OVER-DRAIN PERFORATION	• 3/8 Inch Holes • 4 Inches on center • 90° around pipe (4", 90°)
STONE SUB-BASE	Clean open graded, washed silica stone meeting MD SHA Course Aggregate 57 grading requirements. Filter cloth shall not be used horizontally between the sub-base material and the soil sub-grade.
SAND	See Montgomery County Sand Specifications.
SOIL SUBGRADE	Site geotechnical engineer-approved subgrade shall be proof rolled and scarified. Bottom shall be flat or per Stepped/Sloped Permeable Pavement Detail.
PERVIOUS CONCRETE	Pervious concrete construction must be performed by National Ready Mixed Association Certified Pervious Concrete Installer. All construction must be done per ACI 522.13.

MONTGOMERY COUNTY MARYLAND 1776

MONTGOMERY COUNTY DEPARTMENT OF PERMITTING SERVICES
WATER RESOURCES DIVISION

PERMEABLE PAVEMENT DETAIL

DATE: MAY 1, 2017

SCALE: NONE

STORMFILTER DESIGN NOTES

- STORMFILTER TREATMENT CAPACITY VARIES BY CARTRIDGE COUNT AND LOCALLY APPROVED SURFACE AREA SPECIFIC FLOW RATE. PEAK CONVEYANCE CAPACITY TO BE DETERMINED BY ENGINEER OF RECORD.
- A 10' x 24' [3048 mm x 7315 mm] CURB INLET STYLE STORMFILTER IS SHOWN WITH THE MAXIMUM NUMBER OF CARTRIDGES (3) AND IS AVAILABLE IN A RIGHT INLET (AS SHOWN) OR A LEFT INLET CONFIGURATION.
- ALL PARTS AND INTERNAL ASSEMBLY PROVIDED BY CONTECH UNLESS OTHERWISE NOTED.

CARTRIDGE SIZE (in. [mm])	27 [686]			18 [457]			LOW DROP		
RECOMMENDED MINIMUM HYDRAULIC DROP (H, ft. [mm])	3.05 [930]			2.3 [701]			1.8 [549]		
SPECIFIC FLOW RATE (gpm/sf [L/s/m²])	2 [1.36]	1.67* [1.13]*	1 [0.65]	2 [1.36]	1.67* [1.13]*	1 [0.68]	2 [1.36]	1.67* [1.13]*	1 [0.68]
CARTRIDGE FLOW RATE (gpm [L/s])	22.5 [1.42]	18.79 [1.19]	11.25 [0.71]	15 [0.95]	12.53 [0.79]	7.5 [0.47]	10 [0.63]	8.35 [0.53]	5 [0.32]

* 1.67 gpm/sf [1.13 L/s/m²] SPECIFIC FLOW RATE IS APPROVED WITH PHOSPHOSORB® (PSORB) MEDIA ONLY

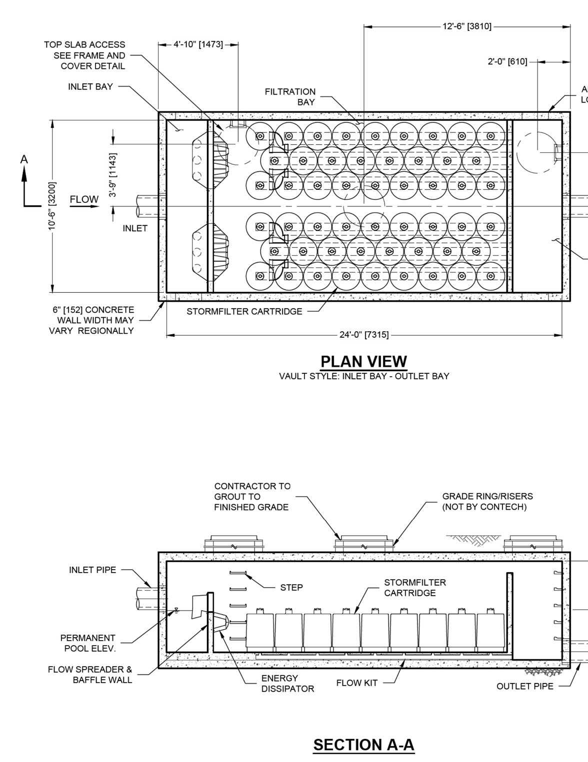

SITE SPECIFIC DATA REQUIREMENTS			
STRUCTURE ID			
WATER QUALITY FLOW RATE (cfs [L/s])			
PEAK FLOW RATE (cfs [L/s])			
RETURN PERIOD OF PEAK FLOW (yrs)			
CARTRIDGE FLOW RATE			
CARTRIDGE SIZE (27, 18, LOW DROP (LD))			
MEDIA TYPE (PERLITE, ZPG, PSORB)			
NUMBER OF CARTRIDGES REQUIRED			
FILTER BAY RIM ELEVATION			
PIPE DATA:	INVERT	MATERIAL	DIAMETER
INLET PIPE 1			
INLET PIPE 2			
OUTLET PIPE			
NOTES/SPECIAL REQUIREMENTS:			

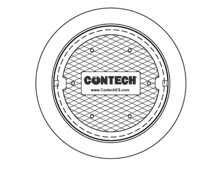

FRAME AND COVER
(SIZE VARYIES
NOT TO SCALE

GENERAL NOTES

1. CONTECH TO PROVIDE ALL MATERIALS UNLESS NOTED OTHERWISE.
2. DIMENSIONS MARKED WITH ( ) ARE REFERENCE DIMENSIONS. ACTUAL DIMENSIONS MAY VARY.
3. FOR SITE SPECIFIC DRAWINGS WITH DETAILED VAULT DIMENSIONS AND WEIGHTS, PLEASE CONTACT YOUR CONTECH ENGINEERED SOLUTIONS LLC REPRESENTATIVE. www.ContechES.com
4. STORMFILTER WATER QUALITY STRUCTURE SHALL BE IN ACCORDANCE WITH ALL DESIGN DATA AND INFORMATION CONTAINED IN THIS DRAWING.
5. STRUCTURE SHALL MEET AASHTO HS20 LOAD RATING, ASSUMING EARTH COVER OF 0' - 5' [1524] AND GROUNDWATER ELEVATION AT, OR BELOW, THE OUTLET PIPE INVERT ELEVATION. ENGINEER OF RECORD TO CONFIRM ACTUAL GROUNDWATER ELEVATION. CASTINGS SHALL MEET AASHTO M306 AND BE CAST WITH THE CONTECH LOGO.
6. FILTER CARTRIDGES SHALL BE MEDIA-FILLED, PASSIVE, SIPHON ACTUATED, RADIAL FLOW, AND SELF CLEANING. RADIAL MEDIA DEPTH SHALL BE 7-INCHES. FILTER MEDIA CONTACT TIME SHALL BE AT LEAST 38 SECONDS.
7. SPECIFIC FLOW RATE IS EQUAL TO THE FILTER TREATMENT CAPACITY (gpm [L/s]) DIVIDED BY THE FILTER CONTACT SURFACE AREA (sq ft [sq m]).
8. STORMFILTER STRUCTURE SHALL BE PRECAST CONFORMING TO ASTM C-857 AND AASHTO LOAD FACTOR DESIGN METHOD.

INSTALLATION NOTES

A. ANY SUB-BASE, BACKFILL DEPTH, AND/OR ANTI-FLOTATION PROVISIONS ARE SITE-SPECIFIC DESIGN CONSIDERATIONS AND SHALL BE SPECIFIED BY ENGINEER OF RECORD.
B. CONTRACTOR TO PROVIDE EQUIPMENT WITH SUFFICIENT LIFTING AND REACH CAPACITY TO LIFT AND SET THE STORMFILTER VAULT (LIFTING CLUTCHES PROVIDED).
C. CONTRACTOR TO INSTALL JOINT SEALANT BETWEEN ALL VAULT SECTIONS AND ASSEMBLE VAULT.
D. CONTRACTOR TO PROVIDE, INSTALL, AND GROUT PIPES. MATCH OUTLET PIPE INVERT WITH OUTLET BAY FLOOR.
E. CONTRACTOR TO TAKE APPROPRIATE MEASURES TO PROTECT CARTRIDGES FROM CONSTRUCTION-RELATED EROSION RUNOFF.

CONTECH ENGINEERED SOLUTIONS LLC
www.contechES.com
8301 State Highway 29 North, Alexandria, MN 56308
800-328-2047 320-852-7500 320-852-7067 FAX

SF1024
STORMFILTER
STANDARD DETAIL

STORMFILTER CONCRETE CATCHBASIN DESIGN NOTES

STORMFILTER TREATMENT CAPACITY IS A FUNCTION OF THE CARTRIDGE SELECTION AND THE NUMBER OF CARTRIDGES. 1 CARTRIDGE CATCHBASIN HAS A MAXIMUM OF ONE CARTRIDGE. SYSTEM IS SHOWN WITH A 18" CARTRIDGE, AND IS ALSO AVAILABLE WITH AN 27" CARTRIDGE.

PEAK HYDRAULIC CAPACITY PER TABLE BELOW. IF THE SITE CONDITIONS EXCEED PEAK HYDRAULIC CAPACITY, A DOWNSTREAM BYPASS STRUCTURE IS REQUIRED.

CARTRIDGE SELECTION

CARTRIDGE HEIGHT	27"			18"			18" DEEP		
RECOMMENDED HYDRAULIC DROP (H)	3.05'			2.3'			3.5'		
SPECIFIC FLOW RATE (gpm/sf)	2 gpm/sf	1.67* gpm/sf	1 gpm/sf	2 gpm/sf	1.67* gpm/sf	1 gpm/sf	2 gpm/sf	1.67* gpm/sf	1 gpm/sf
CARTRIDGE FLOW RATE (gpm)	22.5	18.79	11.25	15	12.53	7.5	15	12.53	7.5
PEAK HYDRAULIC CAPACITY	1.0			1.0			1.8		
INLET PERMANENT POOL LEVEL (A)	1'-7"			1'-7"			2'-4"		
OVERALL STRUCTURE HEIGHT (B)	5'-0"			4'-0"			5'-0"		

* 1.67 gpm/sf SPECIFIC FLOW RATE IS APPROVED WITH PHOSPHOSORB ® (PSORB) MEDIA ONLY

GENERAL NOTES

1. CONTECH TO PROVIDE ALL MATERIALS UNLESS NOTED OTHERWISE.
2. FOR SITE SPECIFIC DRAWINGS WITH DETAILED STORMFILTER CATCHBASIN STRUCTURE DIMENSIONS AND WEIGHTS, PLEASE CONTACT YOUR CONTECH ENGINEERED SOLUTIONS LLC REPRESENTATIVE. www.ContechES.com
3. STORMFILTER CATCHBASIN WATER QUALITY STRUCTURE SHALL BE IN ACCORDANCE WITH ALL DESIGN DATA AND INFORMATION CONTAINED IN THIS DRAWING.
4. INLET SHOULD NOT BE LOWER THAN OUTLET. INLET (IF APPLICABLE) AND OUTLET PIPING TO BE SPECIFIED BY ENGINEER AND PROVIDED BY CONTRACTOR.
5. CONCRETE STRUCTURE TO BE MANUFACTURED OF PRECAST CONCRETE TO MEET HS25 LOAD RATING. CASTINGS SHALL MEET AASHTO M306 LOAD RATING.
6. FILTER CARTRIDGES SHALL BE MEDIA-FILLED, PASSIVE, SIPHON ACTUATED, RADIAL FLOW, AND SELF CLEANING. RADIAL MEDIA DEPTH SHALL BE 7-INCHES. FILTER MEDIA CONTACT TIME SHALL BE AT LEAST 38 SECONDS.
7. SPECIFIC FLOW RATE IS EQUAL TO THE FILTER TREATMENT CAPACITY (gpm) DIVIDED BY THE FILTER CONTACT SURFACE AREA (sq ft).

INSTALLATION NOTES

A. ANY SUB-BASE, BACKFILL DEPTH, AND/OR ANTI-FLOTATION PROVISIONS ARE SITE-SPECIFIC DESIGN CONSIDERATIONS AND SHALL BE SPECIFIED BY ENGINEER OF RECORD.
B. CONTRACTOR TO PROVIDE EQUIPMENT WITH SUFFICIENT LIFTING AND REACH CAPACITY TO LIFT AND SET THE CATCHBASIN (LIFTING CLUTCHES PROVIDED).
C. CONTRACTOR TO TAKE APPROPRIATE MEASURES TO PROTECT CARTRIDGES FROM CONSTRUCTION-RELATED EROSION RUNOFF.

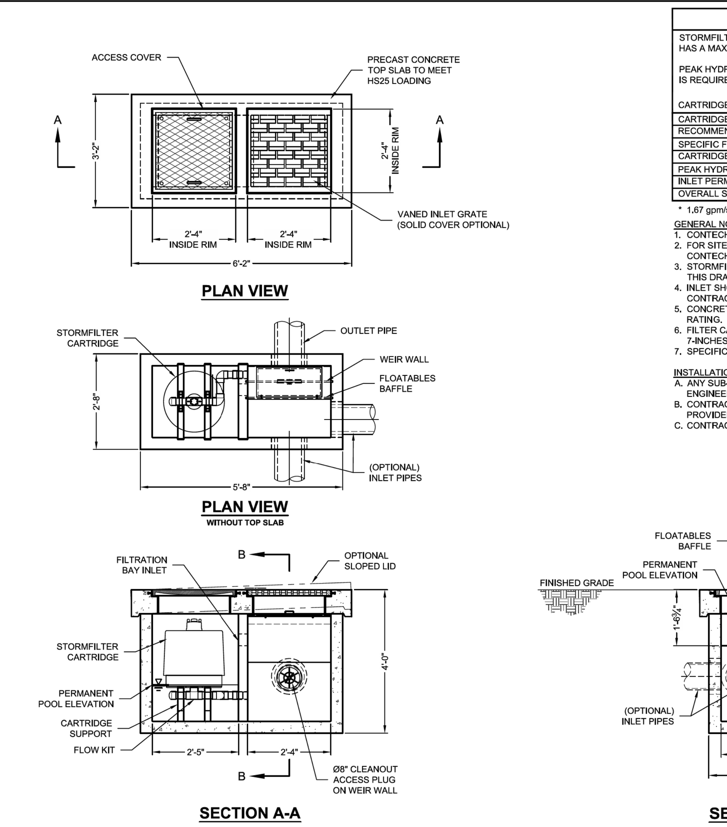

1-CARTRIDGE CATCHBASIN STORMFILTER DATA		
STRUCTURE ID		XXX
WATER QUALITY FLOW RATE (cfs)		X.XX
PEAK FLOW RATE (<1 cfs)		X.XX
RETURN PERIOD OF PEAK FLOW (yrs)		XXX
CARTRIDGE HEIGHT (27", 18", 18" DEEP)		XX
CARTRIDGE FLOW RATE (gpm)		XX
MEDIA TYPE (PERLITE, ZPG, PSORB)		XXXXX
RIM ELEVATION		XXX.XX'
PIPE DATA:	I.E.	DIAMETER
INLET STUB	XXX.XX'	XX"
OUTLET STUB	XXX.XX'	XX"
CONFIGURATION: OUTLET INLET / INLET; OUTLET INLET / INLET		
SLOPED LID		YES\NO
SOLID COVER		YES\NO
NOTES/SPECIAL REQUIREMENTS:		

CONTECH ENGINEERED SOLUTIONS LLC
www.ContechES.com
9025 Centre Pointe Dr., Suite 400, West Chester, OH 45069
800-338-1122 513-645-7000 513-645-7993 FAX

1 CARTRIDGE CONCRETE CATCHBASIN
STORMFILTER
STANDARD DETAIL

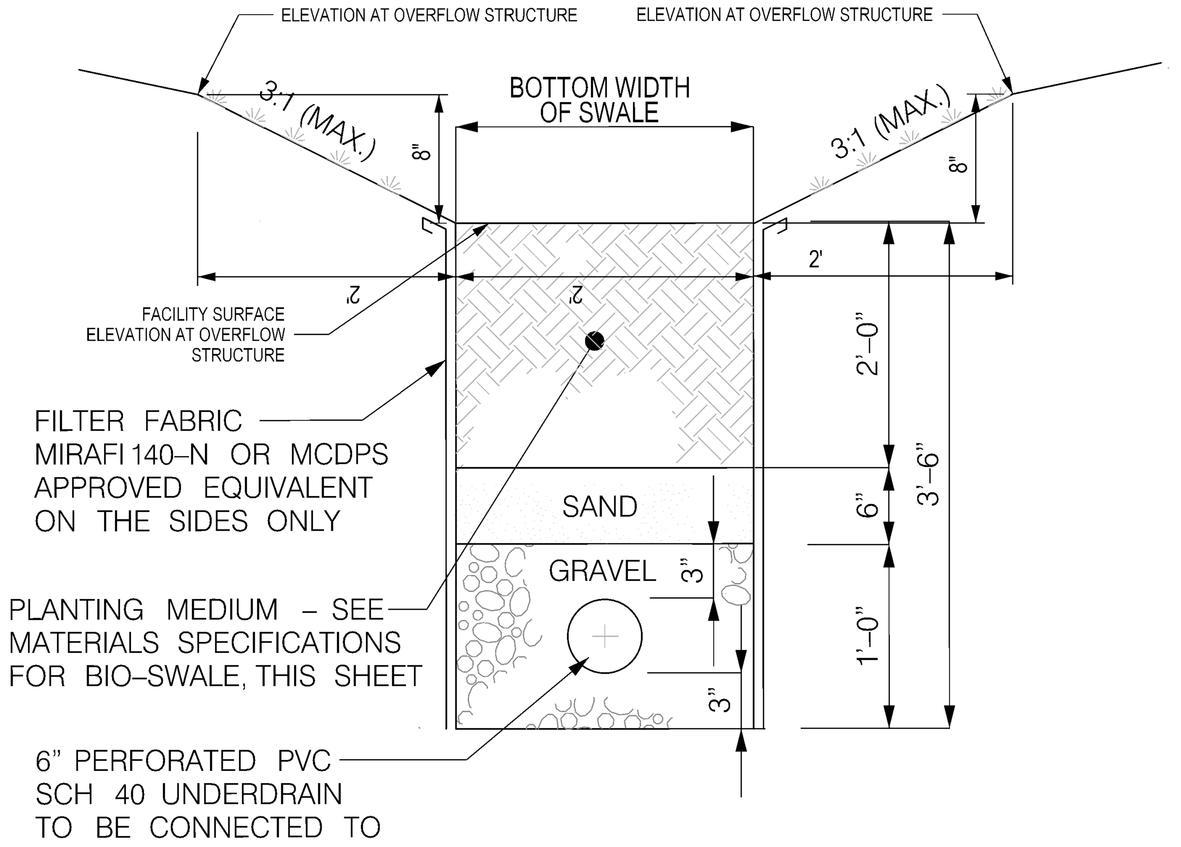

WATER QUALITY BIO-SWALE
TYPICAL SECTION

NOT TO SCALE

1

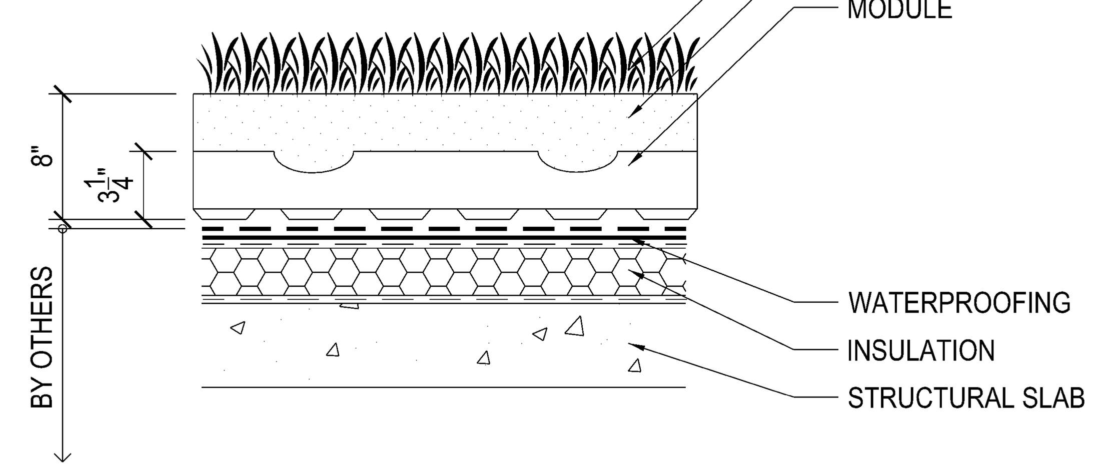

TYPICAL GREEN ROOF
N.T.S.

1

SOLTESZ, INC.
Engineering
Surveying
Planning
Environmental Sciences
ROCKVILLE OFFICE
2 Research Place, Suite 100
Rockville, MD 20850
P. 301.948.2750 F. 301.948.9067
Rockville
Lanham
Waldorf
Leonardtown
Frederick
Soltesz DC, LLC
www.solteszco.com

NO.	REVISIONS	BY	DATE
1	REVISIONS FOR SWM SITE DEVELOPMENT CONCEPT PHASE-1	AG	2/8/2021

DATE: APRIL 2021 — CAD STANDARDS VERSION: V8 - NCS
DESIGNED: A.G. — TECHNICIAN: A.G. — CHECKED: J.S.

MISS UTILITY NOTE

INFORMATION CONCERNING EXISTING UNDERGROUND UTILITIES WAS OBTAINED FROM AVAILABLE RECORDS. THE CONTRACTOR MUST DETERMINE THE EXACT LOCATION AND ELEVATION OF ALL EXISTING UTILITIES AND UTILITY CROSSINGS BY DIGGING TEST PITS BY HAND, WELL IN ADVANCE OF THE START OF EXCAVATION. CONTACT "MISS UTILITY" AT 1-800-257-7777, 48 HOURS PRIOR TO THE START OF EXCAVATION. IF CLEARANCES ARE LESS THAN SHOWN ON THIS PLAN OR TWELVE (12) INCHES, WHICHEVER IS LESS, CONTACT THE ENGINEER AND THE UTILITY COMPANY BEFORE PROCEEDING WITH CONSTRUCTION. CLEARANCES LESS THAN NOTED MAY REQUIRE REVISIONS TO THIS PLAN.

OWNER/DEVELOPER/APPLICANT

WILGUS ASSOCIATES, LTD PARTNERSHIP, C/O WILLCO
7811 MONTROSE ROAD
SUITE 200
POTOMAC, MD 20854
PHONE: (240) 399-1421
BMAZZUCA@WILLCO.COM
ROBERT A. MAZZUCA

MAP ADC GRID 5285
TAX MAP GQ62
ZONING CATEGORY: CR-2.0, C-1.0, R-1.50, H-200 CR-2.0, C-0.25, R-1.75, H-75 CRN-0.75, C-0.0, R-0.75, H-50
WSSC 200' SHEET 215 NW 06
SITE DATUM HORIZONTAL: NAD83 VERTICAL: NAD83

PROFESSIONAL CERTIFICATION
I HEREBY CERTIFY THAT THESE DOCUMENTS WERE PREPARED OR APPROVED BY ME, AND THAT I AM A DULY LICENSED PROFESSIONAL ENGINEER UNDER THE LAWS OF THE STATE OF MARYLAND,
LICENSE NO. 30287 , EXPIRATION DATE: 05/18/2022

STATE OF MARYLAND TIMOTHY J. STEMANN 30287 PROFESSIONAL ENGINEER

STORM WATER MANAGEMENT CONCEPT DETAILS

STORM WATER MANAGEMENT CONCEPT
SITE DEVELOPMENT CONCEPT (PHASE 1)

NORTHPARK AT MONTROSE (WILGUS TRACT)

RESIDUE PARCEL 5, ROCKVILLE FACLIITY, PLAT BOOK 102 PLAT NO 11588, RESIDUE PARCEL 7A, ROCKVILLE FACILITY, PLAT BOOK 104 PLAT NO. 11948
RESIDUE PARCEL Q, WASHINGTON SCIENCE CENTER, PLAT BOOK 183 PLAT NO. 20343, RESIDUE PARCEL 7B, ROCKVILLE FACILITY, PLAT BOOK 104 PLAT NO. 11948
RESIDUE PARCEL R, WASHINGTON SCIENCE CENTER, PLAT BOOK 183 PLAT NO. 20343, RESIDUE PARCEL 6, ROCKVILLE FACILITY, PLAT BOOK 102 PLAT NO. 11588

6060 MONTROSE ROAD
ROCKVILLE (4TH) ELECTION DISTRICT, MONTGOMERY COUNTY, MARYLAND

ONE INCH — 1" = N.T.S.

SHEET 5 OF ~~7~~ 10

PROJECT NO. 1326-02-01

P:\13260201\Engineer\Sheet_Files\SWM\SWM Concept Ph 1\05_SWM_Details.sht Scale= 1.0000 sf / in. User= AGurung PLTdrv= PDF_Grey_300.pltcfg Pentbl= TEXT_SUB.tbl 4/14/2021 3:09:55 PM